# CRYSTAL OSCILLATOR
## PROGRAMMABLE
## OUTPUT : CMOS

# SG - 8002 series

- Frequency range : 1 MHz to 125 MHz
- Supply voltage : 3.0 V / 3.3 V / 5.0 V
- Function : Output enable(OE) or Standby( $\overline{ST}$ )

- Short mass production lead time by PLL technology.
- SG-Writer available to purchase, please contact Epson or local sales representative.

Pb Free
RoHS Compliant

Product Number (please contact us)

CE, CA

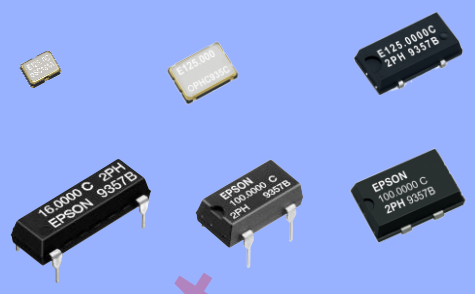

## Specifications (characteristics)

| Item | Symbol | Specifications *2 | | | Conditions / Remarks |
|---|---|---|---|---|---|
| | | PT / ST | PH / SH | PC / SC | |
| Output frequency range | $f_0$ | 1 MHz to 125 MHz | | — | $V_{CC}$ = 4.5 V to 5.5 V |
| | | — | — | 1 MHz to 125 MHz | $V_{CC}$ = 3.0 V to 3.6 V |
| | | — | — | 1 MHz to 66.7 MHz | $V_{CC}$ = 2.7 V to 3.6 V |
| Supply voltage | $V_{CC}$ | 4.5 V to 5.5 V | | 2.7 V to 3.6 V | |
| Storage temperature | T_stg | -55 °C to +125 °C (SG-8002CA / JA / DC / DB) | | | Storage as single product. |
| | | -55 °C to +100 °C (SG-8002JC) | | | |
| | | -40 °C to +125 °C (SG-8002CE) | | | |
| Operating temperature*1 | T_use | -20 °C to +70 °C / -40 °C to +85 °C | | | |
| Frequency tolerance | f_tol | B: ±50 × $10^{-6}$, C: ±100 × $10^{-6}$ | | | -20 °C to +70 °C |
| | | M: ±100 × $10^{-6}$ | | M: ±100 × $10^{-6}$ | -40 °C to +85 °C (except SG-8002JC) *3 |
| Current consumption | $I_{CC}$ | 40 mA Max. (SG-8002CE) | | 28 mA Max. | No load condition, Max. frequency |
| | | 45 mA Max. (SG-8002CA / JC / JA / DC / DB) | | | |
| Output disable current | I_dis | 30 mA Max. | | 16 mA Max. | OE=GND (PT.PH,PC) |
| Stand-by current | I_std | 50 µA Max. | | | $\overline{ST}$ =GND (ST,SH,SC) |
| Symmetry *1 | SYM | 40 % to 60 % | — | | TTL load: 1.4 V, Max. load condition |
| | | 45 % to 55 % | | | |
| | | — | 40 % to 60 % | | CMOS load:50 % $V_{CC}$ level, Max. load condition |
| | | — | 45 % to 55 % | | |
| Output voltage | $V_{OH}$ | $V_{CC}$ -0.4 V Min. | | | $I_{OH}$=-16 mA (PT,ST,PH,SH ) , -8 mA (PC,SC) |
| | $V_{OL}$ | 0.4 V Max. | | | $I_{OL}$=16 mA (PT,ST,PH,SH) , 8 mA (PC,SC) |
| Output load condition (TTL) *1 | L_TTL | 5 TTL Max. | — | | Max. frequency and Max. Supply voltage (SG-8002CE / CA / JA / DC / DB) |
| | | 5 TTL Max. | — | | $f_0$ ≤ 90 MHz and Max. Supply voltage (SG-8002JC ) |
| Output load condition (CMOS) *1 | L_CMOS | 15 pF Max. | | | Max. frequency and Max. Supply voltage (SG-8002CE / JC) |
| | | 15 pF Max. | 25 pF Max | 15 pF Max. | Max. frequency and Max. Supply voltage (SG-8002CA / JA / DC / DB) |
| Input voltage | $V_{IH}$ | 2.0 V Min. | | 70 % $V_{CC}$ Min. | OE terminal or $\overline{ST}$ terminal |
| | $V_{IL}$ | 0.8 V Max. | | 20 % $V_{CC}$ Max. | |
| Rise / Fall time *1 | tr/ tf | 4 ns Max. | — | | TTL load: 0.4 V to 2.4 V level |
| | | — | 3 ns Max. | | CMOS load: 20 % $V_{CC}$ to 80 % $V_{CC}$ level |
| Start-up time | t_str | 10 ms Max. | | | Time at minimum supply voltage to be 0 s |
| Frequency aging | f_aging | ±5 × $10^{-6}$ / year Max. | | | +25 °C, $V_{CC}$=5.0 V/ 3.3 V (PC,SC) First year |

*1 Please refer to "Outline specifications" page for information regarding; operating temperature, available frequencies, symmetry, output load conditions and rise/fall time.
*2 Please refer to "Jitter specifications and characteristics chart" page for PLL-PLL connection & Jitter specification.
*3 Please refer to "Outline specifications" for availability of tolerance "M". A "Frequency checking" program on the Seiko Epson website is also available.

www.datasheet.support

## External dimensions and Recommended footprint

(Unit:mm)

### SG-8002CE Ceramic SON 4pin 3.2x2.5x1.05 mm

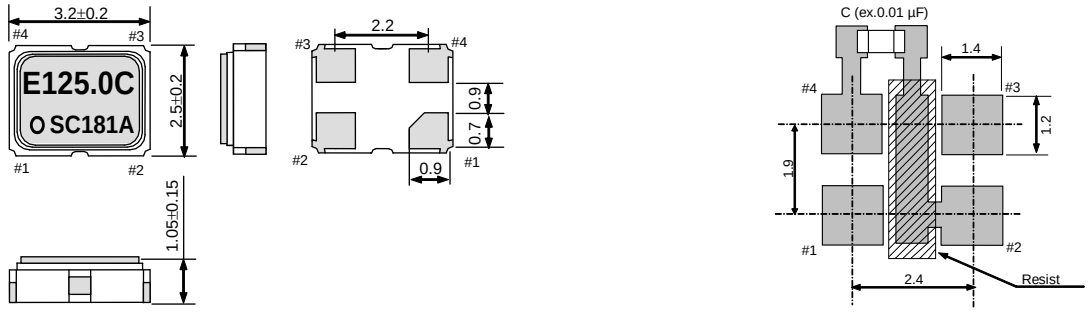


### SG-8002CA Ceramic SON 4pin 7.0x5.0x1.4 mm

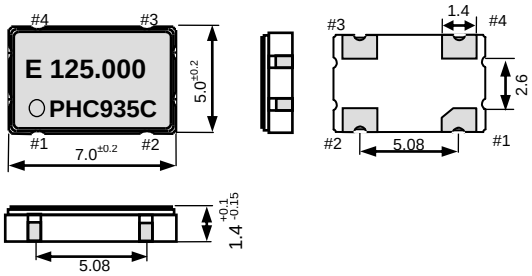


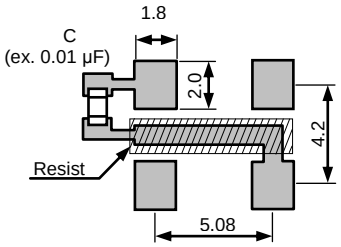


### SG-8002JC SOJ 4pin 10.5x5.8x2.7 mm

Package and pin compatible with SG-636.

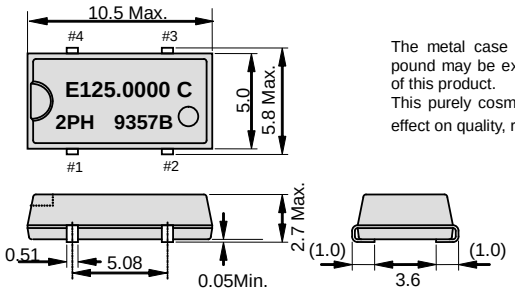


The metal case inside of the molding compound may be exposed on the top or bottom of this product.
This purely cosmetic and does not have any effect on quality, reliability or electrical specs.

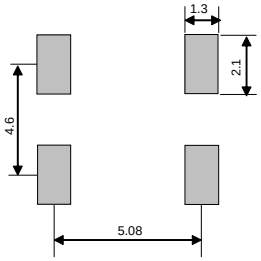


Note.
OE Pin (PT, PH, PC)
OE Pin = "H" or "open": Specified frequency output.
OE Pin = "L": Output is high impedance.

$\overline{ST}$ Pin (ST, SH, SC)
$\overline{ST}$ Pin = "H" or "open": Specified frequency output.
$\overline{ST}$ Pin = "L": Output is low level (weak pull - down), oscillation stops.

Pin map

| Pin | Connection |
|---|---|
| 1 | OE or $\overline{ST}$ |
| 2 | GND |
| 3 | OUT |
| 4 | Vcc |

To maintain stable operation, provide a 0.01uF to 0.1uF by-pass capacitor at a location as near as possible to the power source terminal of the crystal product (between Vcc - GND).

## External dimensions and Recommended footprint (Continued)

(Unit:mm)

**SG-8002JA** **SOJ 4pin 14.0x9.8x4.7 mm** Package and pin compatible with SG-615.

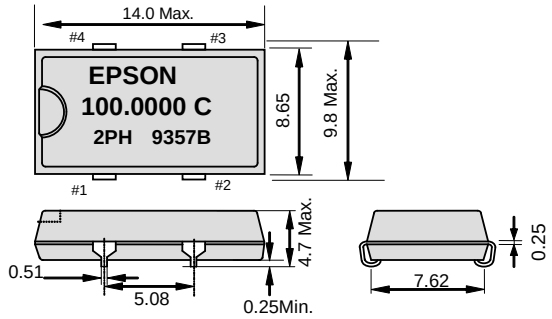


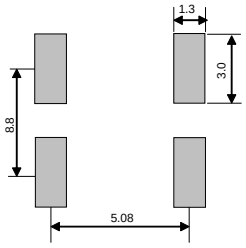


**SG-8002DC** **DIP half size**

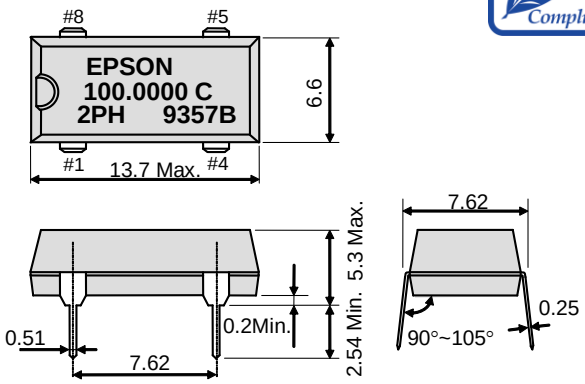


**SG-8002DB** **DIP full size**

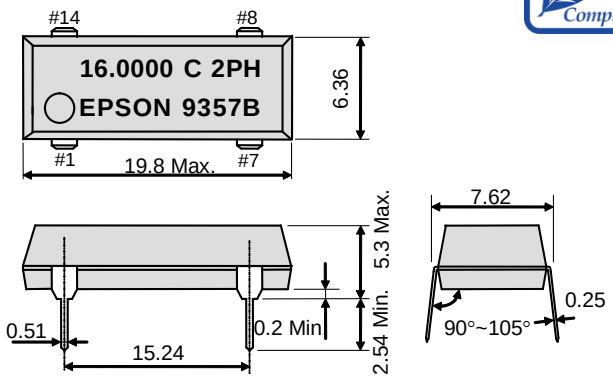


Note.
OE Pin (PT, PH, PC)
OE Pin = "H" or "open": Specified frequency output.
OE Pin = "L": Output is high impedance.

$\overline{ST}$ Pin (ST, SH, SC)
$\overline{ST}$ Pin = "H" or "open": Specified frequency output.
$\overline{ST}$ Pin = "L": Output is low level (weak pull - down), oscillation stops.

Pin map

| Pin | Connection |
|---|---|
| 1 | OE or $\overline{ST}$ |
| 2 | GND |
| 3 | OUT |
| 4 | Vcc |

Pin map: SG-8002DC

| Pin | Connection |
|---|---|
| 1 | OE or $\overline{ST}$ |
| 4 | GND |
| 5 | OUT |
| 8 | Vcc |

Pin map: SG-8002DB

| Pin | Connection |
|---|---|
| 1 | OE or $\overline{ST}$ |
| 7 | GND |
| 8 | OUT |
| 14 | Vcc |

To maintain stable operation, provide a 0.01uF to 0.1uF by-pass capacitor at a location as near as possible to the power source terminal of the crystal product (between Vcc - GND).

## Products number

(Please contact us for each product.)

| | | | |
|---|---|---|---|
| SG-8002CE: | Q3321CExxxxxx00 | SG-8002JC: | Q3307JCx2xxxx00 |
| SG-8002CA: | Q3309CAx0xxxx00 | SG-8002DC: | Q3204DCx2xxxx00 |
| SG-8002JA: | Q3306JAx2xxxx00 | SG-8002DB: | Q3203DBx2xxxx00 |

# SG-8002 Series Outline of specifications

| Model | | Supply voltage | Operating temperature | Output load condition | Symmetry | Output rise time / Output fall time |
|---|---|---|---|---|---|---|
| SG-8002CE | PT/ST | 4.5 V to 5.5 V | -20 °C to +70 °C | 5TTL+15pF | 40 % to 60 % (1.4 V, L_TTL=5 TTL+15 pF, f0≤125 MHz)<br>45 % to 55 % (1.4 V, L_TTL=5 TTL+15 pF, f0≤66.7 MHz) | 2.0 ns Max. (0.8 V to 2.0 V,L_TTL=Max.)<br>4.0 ns Max. (0.4 V to 2.4 V,L_TTL=Max.) |
| | | | -40 °C to +85 °C | | 45 % to 55 % (1.4 V, L_TTL=5 TTL+15 pF, f0≤27.0 MHz) | |
| | PH/SH | | -20 °C to +70 °C | 15 pF (f0≤125 MHz)<br>25 pF (f0≤100 MHz) | 40 % to 60 % (50 % VCC, L_CMOS=15 pF, f0≤125 MHz)<br>45 % to 55 % (50 % VCC, L_CMOS=25 pF, f0≤66.7 MHz) | 3.0 ns Max. (20 % VCC to 80 % VCC,L_CMOS=Max.) |
| | | | -40 °C to +85 °C | 25 pF (f0≤27 MHz) | 45 % to 55 % (50 % VCC, L_CMOS=25 pF, f0≤27.0 MHz) | |
| | PC/SC | 3.0 V to 3.6 V | -40 °C to +85 °C | 15 pF | 40 % to 60 % (50 % VCC, L_CMOS=15 pF, f0≤125 MHz)<br>45 % to 55 % (50 % VCC, L_CMOS=15 pF, f0≤40 MHz) | 3.0 ns Max. (20 % VCC to 80 % VCC,L_CMOS=Max.) |
| | | 2.7 V to 3.6 V | | | 40 % to 60 % (50 % VCC, L_CMOS=15 pF, f0≤66.7 MHz) | |
| SG-8002CA<br>SG-8002JA<br>SG-8002DB<br>SG-8002DC | PT/ST | 4.5 V to 5.5 V | -20 °C to +70 °C | 5TTL+15pF (f0≤125 MHz)<br>25 pF (f0≤66.7 MHz) | 40 % to 60 % (1.4 V, L_TTL=5 TTL+15 pF, f0≤125 MHz)<br>↑ (1.4 V, L_CMOS=25 pF, f0≤66.7 MHz)<br>45 % to 55 % (1.4 V, L_TTL=5 TTL+15 pF, f0≤66.7 MHz) | 2.0 ns Max. (0.8 V to 2.0 V,L_CMOS or L_TTL=Max.)<br>4.0 ns Max. (0.4 V to 2.4 V,L_CMOS or L_TTL=Max.) |
| | | | -40 °C to +85 °C | 5 TTL+15 pF (f0≤40 MHz)<br>15 pF (f0≤55 MHz) | 40 % to 60 % (1.4 V, L_CMOS=15 pF, f0≤55.0 MHz)<br>45 % to 55 % (1.4 V, L_TTL=5 TTL+15 pF, f0≤40.0 MHz) | |
| | PH/SH | | -20 °C to +70 °C | 25 pF (f0≤125 MHz)<br>50 pF (f0≤66.7 MHz) | 40 % to 60 % (50 % VCC, L_CMOS=25 pF, f0≤125 MHz)<br>↑ (50 % VCC, L_CMOS=50 pF, f0≤66.7 MHz)<br>45 % to 55 % (50 % VCC, L_CMOS=25 pF, f0≤66.7 MHz) | 3.0 ns Max. (20 % VCC to 80 % VCC,L_CMOS≤25pF)<br>4.0 ns Max. (20 % VCC to 80 % VCC,L_CMOS=Max.) |
| | | | -40 °C to +85 °C | 15 pF (f0≤55 MHz)<br>25 pF (f0≤40 MHz) | 40 % to 60 % (50 % VCC, L_CMOS=15 pF, f0≤55.0 MHz)<br>45 % to 55 % (50 % VCC, L_MOS=25 pF, f0≤40.0 MHz) | |
| | PC/SC | 3.0 V to 3.6 V | -40 °C to +85 °C | 15 pF<br>30 pF (f0≤40 MHz) | 40 % to 60 % (50 % VCC, L_CMOS=15 pF, f0≤125 MHz)<br>45 % to 55 % (50 % VCC, L_CMOS=30 pF, f0≤40 MHz) | 3.0 ns Max. (20 % VCC to 80 % VCC,L_CMOS≤15pF)<br>4.0 ns Max. (20 % VCC to 80 % VCC,L_CMOS=Max.) |
| | | 2.7 V to 3.6 V | | 15 pF | 40 % to 60 % (50 % VCC, L_CMOS=15 pF, f0≤66.7 MHz) | |
| SG-8002JC | PT/ST | 4.5 V to 5.5 V | -20 °C to +70 °C | 5TTL+15 pF (f0≤90 MHz)<br>15 pF (f0≤125 MHz)<br>25 pF (f0≤66.7 MHz) | 40 % to 60 % (1.4 V,L_CMOS=15 pF, f0≤125 MHz)<br>↑ (1.4 V,L_TTL=5 TTL+15 pF, f0≤90.0 MHz)<br>↑ (1.4 V,L_CMOS=25 pF, f0≤66.7 MHz)<br>45 % to 55 % (1.4 V,L_TTL=5 TTL+15 pF, f0≤66.7 MHz) | 2.0 ns Max. (0.8 V to 2.0 V,L_CMOS or L_TTL=Max.)<br>4.0 ns Max. (0.4 V to 2.4 V,L_CMOS or L_TTL=Max.) |
| | PH/SH | | | 15 pF (f0≤125 MHz)<br>25 pF (f0≤90 MHz)<br>50 pF (f0≤66.7 MHz) | 40 % to 60 % (50 % VCC, L_CMOS=15 pF, f0≤125 MHz)<br>↑ (50 % VCC, L_CMOS=25 pF, f0≤90 MHz)<br>↑ (50 % VCC, L_CMOS=50 pF, f0≤50 MHz)<br>45 % to 55 % (50 % VCC, L_CMOS=25 pF, f0≤66.7 MHz) | 3.0 ns Max. (20 % VCC to 80 % VCC,L_CMOS≤25pF)<br>4.0 ns Max. (20 % VCC to 80 % VCC,L_CMOS=Max.) |
| | PC/SC | 3.0 V to 3.6 V | -20 °C to +70 °C | 15 pF<br>30 pF (f0≤40 MHz) | 40 % to 60 % (50 % VCC, L_CMOS=15 pF, f0≤125 MHz)<br>45 % to 55 % (50 % VCC, L_CMOS=30 pF, f0≤40 MHz) | 3.0 ns Max. (20 % VCC to 80 % VCC,L_CMOS≤15pF)<br>4.0 ns Max. (20 % VCC to 80 % VCC,L_CMOS=Max.) |
| | | 2.7 V to 3.6 V | | 15 pF | 40 % to 60 % (50 % VCC, L_CMOS=15 pF, f0≤66.7 MHz) | |

Product Name (Standard form)

SG-8002 CE 125.000000MHz S C C
① ② ③ ④⑤⑥

①Model ②Package type ③Frequency
④Function (P: Output enable, S:Standby)
⑤Supply voltage ⑥Frequency tolerance / Operating temperature
*As per table below.

| ⑤Supply voltage | |
|---|---|
| T,H | 5.0 V Typ. |
| C | 3.0 / 3.3 V Typ. |

| ⑥Frequency tolerance / Operating temperature | |
|---|---|
| B | ±50 × $10^{-6}$ / -20 to +70°C |
| C | ±100 × $10^{-6}$ / -20 to +70°C |
| M | ±100 × $10^{-6}$ / -40 to +85°C |

## ▶TABLE OF FREQUENCY RANGE*

| Model(①, ②) | Function, Supply voltage(④, ⑤) | Supply voltage(⑤) | Frequency(③) | Frequency tolerance / Operating Temperature(⑥) |
|---|---|---|---|---|
| SG-8002CE | PT/ ST<br>PH/ SH | 4.5 V to 5.5 V | 1.0 MHz to 125 MHz | B,C |
| | | | 1.0 MHz to 27 MHz | M |
| | PC/SC | 3.0 V to 3.6 V | 1.0 MHz to 125 MHz | B,C,M |
| | | 2.7 V to 3.6 V | 1.0 MHz to 66.7 MHz | |
| SG-8002CA<br>SG-8002JA<br>SG-8002DB<br>SG-8002DC | PT/ ST<br>PH/ SH | 4.5 V to 5.5 V | 1.0 MHz to 125 MHz | B,C |
| | | | 1.0 MHz to 55 MHz | M |
| | PC/ SC | 3.0 V to 3.6 V | 1.0 MHz to 125 MHz | B,C,M |
| | | 2.7 V to 3.6 V | 1.0 MHz to 66.7 MHz | |
| SG-8002JC | PT/ ST<br>PH/ SH | 4.5 V to 5.5 V | 1.0 MHz to 125 MHz | B,C |
| | PC/ SC | 3.0 V to 3.6 V | 1.0 MHz to 125 MHz | B,C |
| | | 2.7 V to 3.6 V | 1.0 MHz to 66.7 MHz | |

# SG-8002 series Jitter specifications and characteristics chart

## ■PLL-PLL connection

The SG-8002 series contains a PLL circuit and there are a few cases where the jitter value may be increased when this product is connected to another PLL oscillator (cascading connection). We do not recommend this series for analog video clock use and telecommunication synchronization. Please check in advance if the SG-8002 series jitter is acceptable to your application.
(Jitter specification of the SG-8002 series is max.250 ps/CL=15 pF)

**Jitter Specifications**

| Model | Supply Voltage | Jitter Item | Specifications | Remarks |
|---|---|---|---|---|
| PT / PH<br>ST / SH | 5.0 V ±0.5 V | Cycle to cycle | 150 ps Max. | 33 MHz ≤ $f_0$ ≤ 125 MHz, L_CMOS=15 pF |
| | | | 200 ps Max. | 1.0 MHz ≤ $f_0$ < 33 MHz, L_CMOS=15 pF |
| | | Peak to peak | 200 ps Max. | 33 MHz ≤ $f_0$ ≤ 125 MHz, L_CMOS=15 pF |
| | | | 250 ps Max. | 1.0 MHz ≤ $f_0$ < 33 MHz, L_CMOS=15 pF |
| SC / PC | 3.3 V ±0.3 V | Cycle to cycle | 200 ps Max. | 1.0 MHz ≤ $f_0$ ≤ 125 MHz, L_CMOS=15 pF |
| | | Peak to peak | 250 ps Max. | 1.0 MHz ≤ $f_0$ ≤ 125 MHz, L_CMOS=15 pF |

## ■Remarks on noise management for power supply line

It is not recommended to insert filters or other devices in the power supply line as a counter measure for EMI noise reduction.
This may cause high-frequency impedance of the power supply line and negatively affect stable oscillation.
When using this measure please evaluate the circuitry and device behavior in the circuit to verify and effects on oscillation.
Start up time (0 % Vcc to 90 % Vcc) of power source should be more than 150 μs.

## ■SG-8002 series Characteristics chart

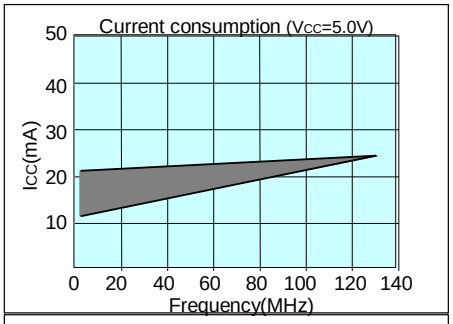


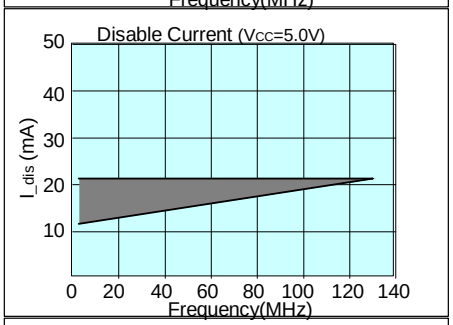


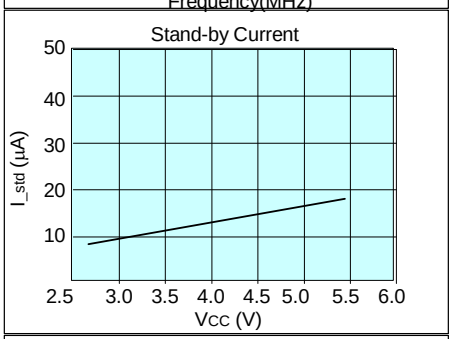


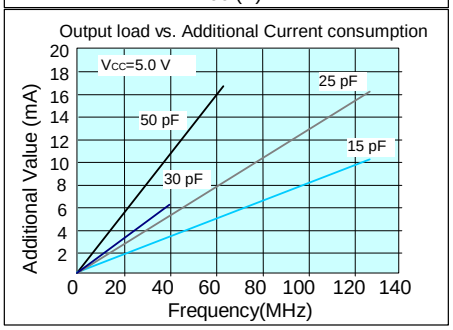


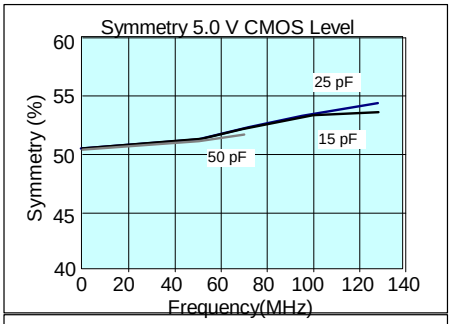


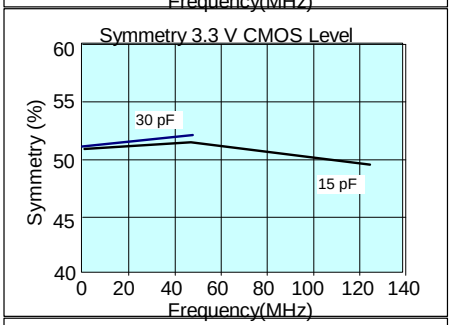


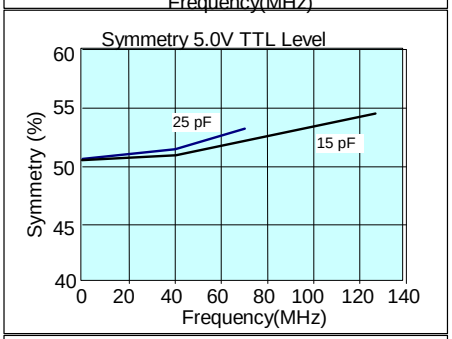


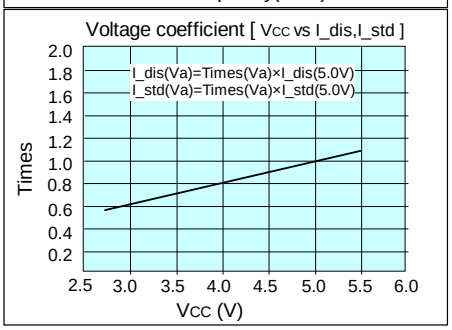


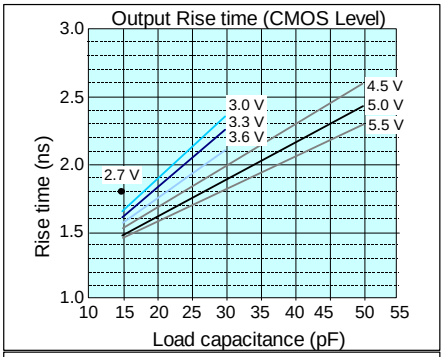


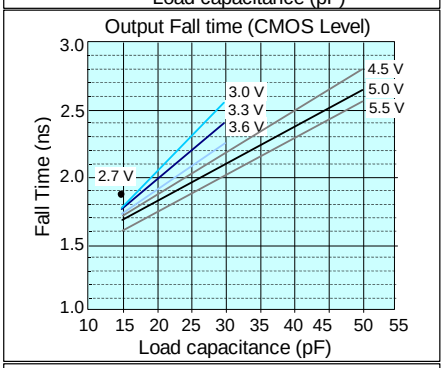


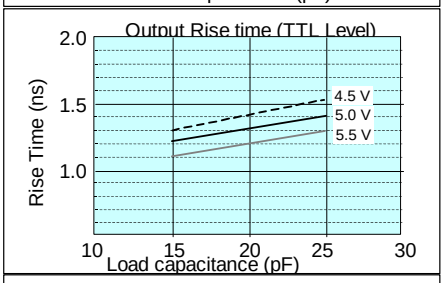


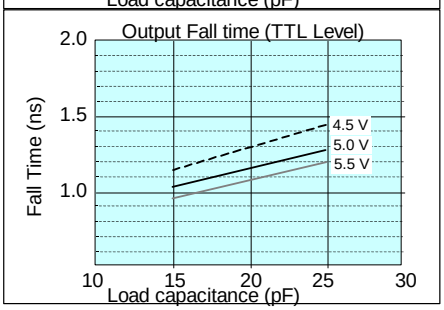

## PROMOTION OF ENVIRONMENTAL MANAGEMENT SYSTEM CONFORMING TO INTERNATIONAL STANDARDS

At Seiko Epson, all environmental initiatives operate under the Plan-Do-Check-Action (PDCA) cycle designed to achieve continuous improvements. The environmental management system (EMS) operates under the ISO 14001 environmental management standard.

All of our major manufacturing and non-manufacturing sites, in Japan and overseas, completed the acquisition of ISO 14001 certification.

ISO 14000 is an international standard for environmental management that was established by the International Standards Organization in 1996 against the background of growing concern regarding global warming, destruction of the ozone layer, and global deforestation.

## WORKING FOR HIGH QUALITY

In order provide high quality and reliable products and services than meet customer needs,

Seiko Epson made early efforts towards obtaining ISO9000 series certification and has acquired ISO9001 for all business establishments in Japan and abroad. We have also acquired ISO/TS 16949 certification that is requested strongly by major automotive manufacturers as standard.

ISO/TS16949 is the international standard that added the sector-specific supplemental requirements for automotive industry based on ISO9001.

**►Explanation of the mark that are using it for the catalog**

| | |
|---|---|
| Pb Free | ►Pb free. |
| RoHS Compliant | ►Complies with EU RoHS directive.<br>*About the products without the Pb-free mark.<br>Contains Pb in products exempted by EU RoHS directive.<br>(Contains Pb in sealing glass, high melting temperature type solder or other.) |
| For Automotive | ►Designed for automotive applications such as Car Multimedia, Body Electronics, Remote Keyless Entry etc. |
| Automotive Safety | ►Designed for automotive applications related to driving safety (Engine Control Unit, Air Bag, ESC etc ). |


# Notice

- This material is subject to change without notice.
- Any part of this material may not be reproduced or duplicated in any form or any means without the written permission of Seiko Epson.
- The information about applied data, circuitry, software, usage, etc. written in this material is intended for reference only. Seiko Epson does not assume any liability for the occurrence of customer damage or infringing on any patent or copyright of a third party. This material does not authorize the licensing for any patent or intellectual copyrights.
- When exporting the products or technology described in this material, you should comply with the applicable export control laws and regulations and follow the procedures required by such laws and regulations.
- You are requested not to use the products (and any technical information furnished, if any) for the development and/or manufacture of weapon of mass destruction or for other military purposes. You are also requested that you would not make the products available to any third party who may use the products for such prohibited purposes.
- These products are intended for general use in electronic equipment. When using them in specific applications that require extremely high reliability, such as the applications stated below, you must obtain permission from Seiko Epson in advance.
  / Space equipment (artificial satellites, rockets, etc.) / Transportation vehicles and related (automobiles, aircraft, trains, vessels, etc.) / Medical instruments to sustain life / Submarine transmitters / Power stations and related / Fire work equipment and security equipment / traffic control equipment / and others requiring equivalent reliability.
- All brands or product names mentioned herein are trademarks and/or registered trademarks of their respective.